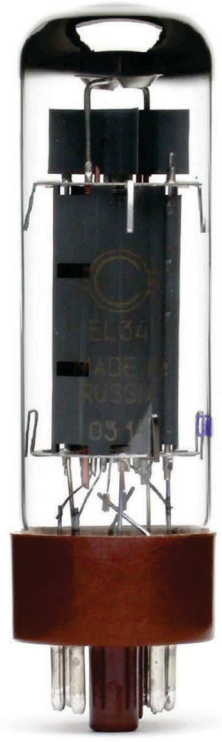

SED/Winged "C" EL34 High Performance Audio Power Pentode

Est. 1912
ST. PETERSBURG, RUSSIA

Characteristics

Electrical				
Heater:	Min.	Nom.	Max.	
Voltage (AC or DC)	5.7	6.3	6.9	V
Current		1.6		A
Cathode:		Oxide-coated, unipotential		
Cathode-to-heater potential, max.			100	V
Direct interelectrode capacitances, max.***				
Grid no.1 to cathode and grid no.3, grid no.2, base sleeve and heater			<16	pF
Plate to cathode and grid no.3, grid no.2, base sleeve and heater			<0.6	pF
Grid no.1 to plate			<1.1	pF
Mechanical				
Operating Position				Any
Base			JEDEC #8ET, octal, 8-pin	
Maximum dimensions:				
Height			113 mm (4.45 in.)	
Seated height			98 mm (3.86 in.)	
Diameter			32 mm (1.26 in.)	
Cooling				Convection
Approximate net weight				60 g (2.1 oz.)

****Without external shielding, nominal values*

EL34 Outline drawing

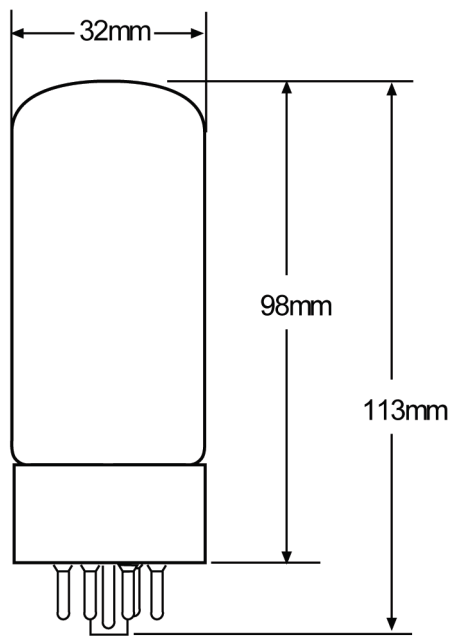

AF Power Amplifier		
Maximum ratings		
DC plate voltage	800	V
Grid no.2 DC (screen) voltage	500	V
Grid no.1 (control) voltage	-100	V
DC cathode current	150	mA
Plate dissipation	25	W
Grid no.2 DC (screen) dissipation	8	W
Bulb temperature (surface hottest point)	250°	C

Base pin connections bottom view

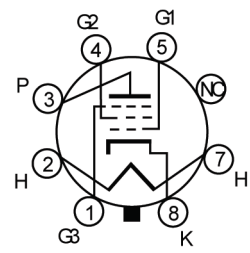

SED/Winged "C" EL34 High Performance Audio Beam Power Pentode

Est. 1912
ST. PETERSBURG, RUSSIA

Typical Operation, Class A, Audio Power Amplifier, Single Tube Connection

Plate Voltage	250	V
Grid 2 Screen Voltage	250	V
Grid 1 Control Voltage*	-14	V
Peak AF Grid 1 Control Voltage	14	V
Zero Signal Plate Current	100	mA
Maximum Signal Plate Current	105	mA
Zero Signal Grid 2 Screen Current (avg)	15	mA
Transconductance (nominal)	11,000	µS
Load Resistance	2000	Ohms
Output Power at 5% distortion	10	W

** Approximate Value (set to zero signal plate current)*

Typical Performance
EL34 Curves